[illegible]

1. [illegible].
2. [illegible].
3. [illegible]

[illegible]

1. [illegible]

[illegible]____[illegible]____. [illegible] R [illegible] [illegible] I [illegible]

U [illegible] $\frac{U}{I}$ [illegible]____[illegible] I [illegible] U [illegible].

[illegible] [illegible] [illegible]

[illegible]

2. [illegible]

(1) [illegible]

	[illegible]	[illegible]
[illegible]	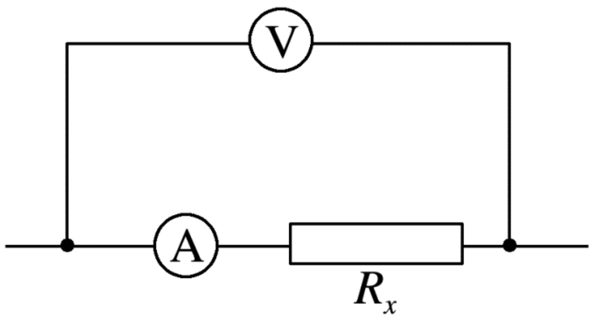	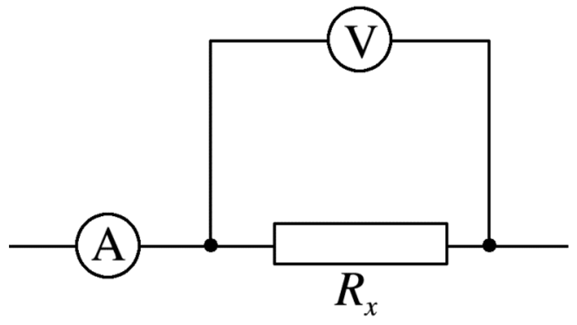
[illegible]	[illegible]	[illegible]

A [illegible] $=I_{Rx}$ V [illegible] U_{Rx}

A [illegible] I_{Rx} V [illegible] $=U_{Rx}$

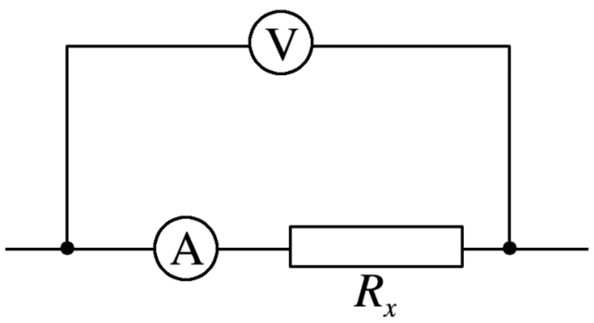

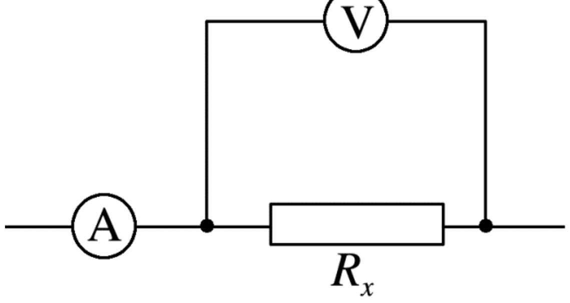

[illegible]	$R_{[illegible]}[illegible]\frac{U_{[illegible]}}{I_{[illegible]}}[illegible]R_x[illegible]R_A$ [illegible] [illegible] ______ [illegible]	$R_{[illegible]}[illegible]\frac{U_{[illegible]}}{I_{[illegible]}}[illegible]\frac{U_{[illegible]}}{I_x[illegible]I_V}$ [illegible] [illegible] ______ [illegible]
[illegible]	[illegible] [illegible] ___ [illegible] A [illegible]	[illegible] [illegible] ___ [illegible] V [illegible]

1.[illegible] $R_x[illegible]\sqrt{R_A R_V}$ [illegible] [illegible] ___ [illegible] $R_x[illegible]\sqrt{R_A R_V}$ [illegible] [illegible] [illegible] ___ [illegible]. 2.[illegible]

A [illegible]

[illegible]

(2) [illegible]

[illegible]	[illegible]	[illegible]
[illegible]	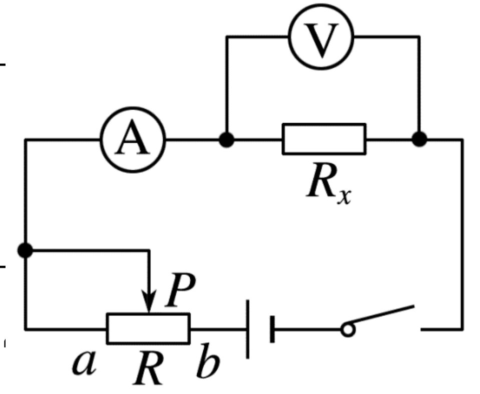	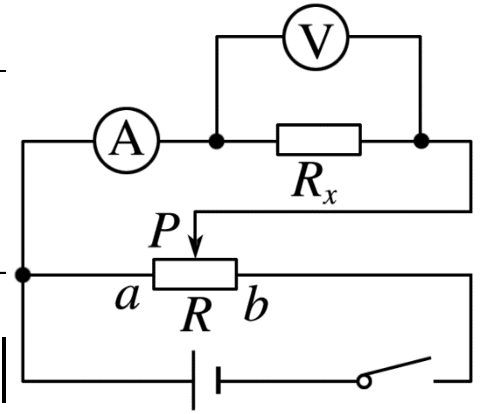
[illegible]	[illegible]“[illegible]	[illegible]“[illegible]

[illegible]	$\frac{R_x}{R[illegible]R_x}E$ [illegible] E ([illegible])	0 [illegible] E ([illegible])
[illegible]	[illegible] R_x [illegible] R [illegible] R [illegible]	(1) [illegible] (2) [illegible] R_x [illegible] R

□□□□□□

□□□□(4□6 V□□)□□□□□□□□□(“4 V　0.7 A”□“3.8 V　0.3 A”)□___□□□□□___□□□□□___□□□___□□□□□□□□□□□□.

[illegible]

1. [illegible]

(1) [illegible]

[illegible]

[illegible].

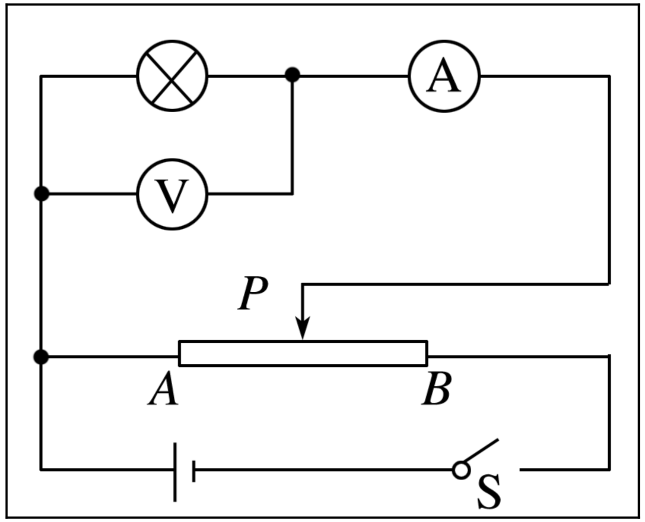

(2) [illegible] S [illegible] U [illegible] I.

(3) [illegible] U [illegible] I [illegible].

[illegible]	1	2	3	4	5	6	7	8
[illegible] U/V								
[illegible] I/A								

(4) [illegible].

2. [illegible]

(1) [illegible]____ U [illegible]____ I [illegible].

(2) [illegible].([illegible])

(3) [illegible]____ [illegible] [illegible].

3. [illegible]

(1) [illegible].

(2) [illegible]____.

[illegible]

4. [illegible]

(1) [illegible] ([illegible]

(2) [illegible]

(3) [illegible]

5. [illegible]

(1) [illegible] I [illegible] U [illegible]_______ [illegible].

[illegible]

(2) [illegible]____ [illegible].

[illegible]

(3) [illegible] I [illegible] U [illegible]______________ [illegible].

[illegible]